HAVELLS

DC Controller(Microwave) User's Manual

Model:HL-STM-SENSOR

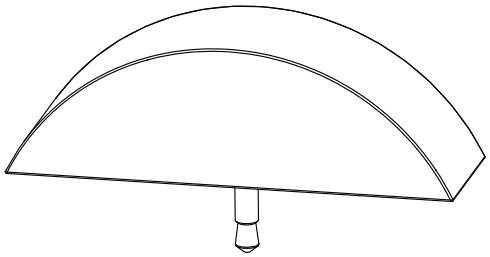

EN
Instruction
MI250610A0

INITIALIZATION

the sensor turns on the light at 100% brightness, and will be turned 50% dimming brightness after 10 seconds . During initialization,the sensor is not able to detect movement.

DEFAULT SETTING

Sensitivity: 100%, Hold time: 1min, Daylight sensor: Disable, Stand by period: 1Min, Stand by DIM level:20%

APPLICATION NOTICE

1. Sensor should be installed by a professional electrician. Please turn off power before installing, wiring.
2. The distance is related to factors such as the moving speed of the moving object, the size of the moving object, the installation height, the installation angle, whether the installation environment is open, and the material of the reflector. The detection distance given in the specification is a typical value, it is 165cm/65kg people who walks in an open indoor environment
3. The daylight threshold is in a sunny environment, no shadows, and ambient light diffuse reflection conditions. In different periods, climates, and environments, the daylight value detected by the light sensor may be different.
4. Sensor parameters may need to be reconfigured in different installation environments, please refer to the following instructions or contact the manufacturer
5. This sensor is only for indoor use, outdoor use may be false triggered by wind and rain, and surrounding moving objects.
6. The installation height of the sensor product cannot exceed 6 meters, and the suitable height is 3 meters; the distance between the two sensors should be greater than 3 meters.
7. When the sensor is installed in a metal lamp, on a metal reflective surface, or in a narrow closed environment, the microwaves will be reflected multiple times and cause false triggering. Please reduce the sensor sensitivity or contact the manufacturer for technical support.
8. Sensor is compatible with different 0-10V driver but dimming effect will be different.
9. DC regulated power supply with stable output voltage and low ripple coefficient must be used. The ripple of the power supply should be less than 100mV; the load current should be greater than 50 mA
10. For the new installation environment, it is recommended to test 5pcs samples before installation.

DIMENSION(mm)

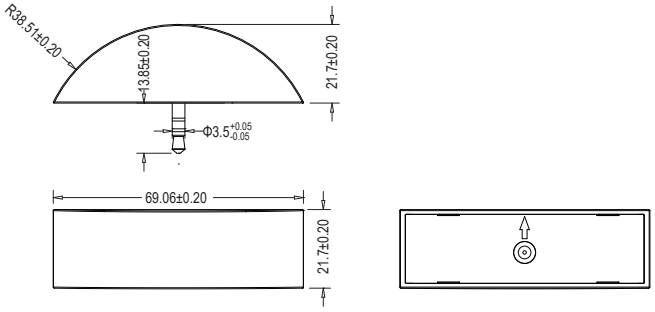

Function

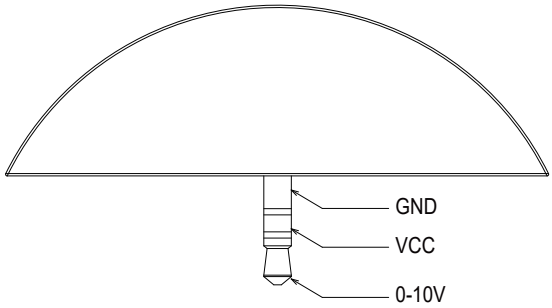

DETECTION AREA

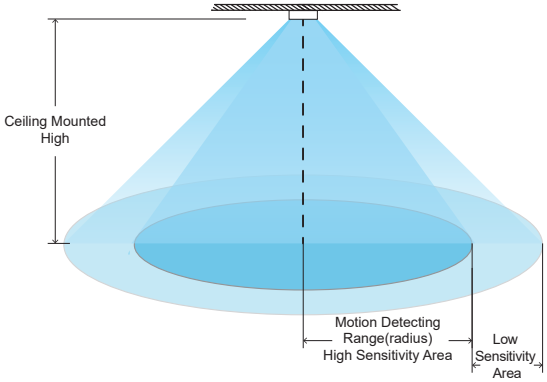

SPECIFICATIONS

Model	LA05
Interface	Earphone
Rated voltage	12±1Vdc
Rated current	15±5mA
Ripple voltage	<100mVp-p
Working mode	0 -10VDC dimming signal
Transmitting Power	1mW Max.
Operating frequency	5.8GHz ±75MHz, ISM band
Detection Area	100% /75%/50%/25%
Hold Time	10s/1min/10min/30min
Stand-by Period	0s/1min/30min/60min/+∞
Daylight sensor	Daylight threshold
	10Lux/30Lux/50Lux/100Lux/Disable (Ambient diffusionstatus)
Stand-by DIM Level	10%(1.4-1.6V) 20%(1.9-2.1V) 30%(2.9-3.1V) 50% (4.9-5.1V)
Detection range (radius)	Ceiling installation 3m high: 0.3m/s≥3m, 1m/s≥3m
Mounting height	3m(6mMax)
Operating temperature	-35°C~+60°C
Storage temperature	-40°C~80°C, humidity ≤85% (non-condensing)
IP Rating	IP20
Installation requirements	Built-in installation
Warranty	5 years warranty @Ta

© Havells Lighting LLC | All Rights Reserved.
Specifications and Data Subject to change without Notice.

HL-STM-SENSOR-REMOTE

Remote for dimmable sensors

Display Area

BRIGHTNESS (70%/80%/90%/100%)
STANDBY DIM (10%/20%/30%/50%)
SENSITIVITY (20%/50%/75%/100%)
HOLD TIME (10S/1min/10min/30min)
STANDBY TIME (+∞ /1min/30min/60min)
DAYLIGHT (10lx/30lx/50lx/100lx)

Button Setting Area

ON/OFF (Long press the "ON/OFF" button until the brightness indicator light is on(First-row). Press to turn on or turn off the fixture.)

BRIGHTNESS (Press to adjust the dimming level 70%/80%/90%/100%.)

SEND (Press to deliver the saved setting. The indicator light flashes once indicating the setting is delivered successfully.)

HOLD TIME (Press to adjust the hold time 10s/1min/10min/30min)

STANDBY DIM (Press to adjust the stand-by dimming level 10%/20%/30%/50%.)

STANDBY TIME (Press to adjust the stand-by time +∞ /1min/30min/60min.)
Note: +∞ means unlimited stand-by time,and the light control mode is the light control priority mode, otherwise it's the light threshold mode.

SENSITIVITY (Press to adjust the sensitivity 20%/50%/75%/100%.) Note: PIR Motion Sensor has no sensitivity setting, the default 100%.

DAYLIGHT (Long press the button until the daylight indicator light is on, press to adjust the threshold 10lx/30lx/50lx/100lx.)

RESET
Note: Press the "RESET" button to reset the sensor when the current setting of the sensor is forgotten or any error is found on the setting of program, and the sensor parameters will be adjusted to the initial setting as "Brightness: 70%, hold time: 10s, stand-by dim: 10%, stand-by time: +∞, sensitivity: 20%, daylight: off.", and then adjust each parameteres in turn and press the "SEND" button. The lamp flashes once indicating the setting is delivered successfully.

+ Press to increase brightness(0-100%).

- Press to reduce brightness(100%-0%).

TEST
The button "TEST" is for testing purpose after debugging. Press this button, the sensor goes to test mode(hold time is only 3s).

Attention

1. Press "SEND" button each time after the setting is changed. The lamp flashes once indicating the setting is delivered successfully.
2. The setting will be delivered successfully only when the remote control is on. The indicator light will turn off automatically if no button is pressed within 10 seconds.
3. When using "ON/OFF" button, all buttons except the "ON/OFF", "BRIGHTNESS" and "SEND" will be disabled.
4. When using "TEST" button, all buttons except the "TEST", "SENSITIVITY" and "SEND" will be disabled.
5. Due to the dimming ratio difference between different led drivers, the preset percentage and the measured value of BRIGHTNESS and STAND-BY DIM may vary.
6. Light control priority mode: the on/off illumination values of each each gear is 10lx/50lx, 30lx/100lx, 50lx/150lx, 100lx/200lx.
7. Light control threshold mode: the on/off illumination values of each each gear is 10lx/ 30lx/ 50lux/ 100lux, when the ambient illumination is less than the set illumination and the movement of people or objects is detected, the light will turn on to the preset brightness.

© Havells Lighting LLC | All Rights Reserved.
Specifications and Data Subject to change without Notice.